FULL AUTO

RUGER 10/22

FULL AUTO
CONVERSION MANUAL

Full Auto Conversion
Of The Ruger 10-22
Semi-Automatic Carbine

Full Auto

Ruger 10/22
Full Auto
Conversion Manual

WARNING !

The legal construction and possession of a fully automatic weapon is controlled by the Bureau of Alcohol, Tobacco, and Firearms division of the U.S. Treasury Department.

Proper application to the B.A.T.F., authorization, and permission must be secured before constructing this or any other similar device. Local and state laws vary and may restrict ownership of this or similar type weapons.

Severe penalties are authorized for violators of these laws. Minuteman Publications offers this information for academic study of firearms design and disclaims any responsibility or liability for the improper or illegal use of this or other similar devices.

Table Of Contents

CONTENTS PAGE

Introduction 7

Chapter 1
    Sequence of Operation 9

Chapter 2
    Parts To Be Removed Semi-Automatic........17

Chapter 3
    Parts To Be Modified 19

Chapter 4
    Parts To Be Manufactured 29

Parts List 39

Introduction

The purpose of this manual is to provide the necessary instructions and manufacturing data required for conversion of the Ruger 10-22, semi-automatic carbine, into a selective fire automatic unit.

When modified to the specifications given, the weapon retains its semi-automatic mode of operation and also allows fully automatic functioning by moving the selector lever into the proper position.

The Ruger 10-22 made its debut in 1964, and has become one of the most popular firearms of its type in the world.

These weapons are logical choices for automatic conversion because they have proven themselves to be well made, very rugged, maintain a relatively light weight, and are adaptable to many different sighting arrangements.

The Ruger 10-22 is an economical weapon to purchase, thereby increasing its availability to many persons hampered by the struggling economy. New prices for the standard carbine run in the $90.00 to $130.00 range. Good condition used carbines can be purchased for approximately $45.00 to $75.00.

Another distinct advantage of the system is that ammunition expenses are held to a minimum when compared to various centerfire systems.

The .22 L.R. cartridge is limited in its power and range, but in the fully automatic mode, the 10-22 is a formidable weapon for many applications.

The weapon is well adaptable to silencer construction and use. Many various stock configurations are available, providing greater flexibility for intended use.

Numerous high capacity magazines are available for use with the Ruger 10-22. The EATON SUPPLY, INC. 25 rd., CONDOR 25 rd., MITCHELL 50 rd., and THOMPSON style 50 rd., drum magazines provide much greater flexibility over the standard 10 rd. magazine.

1

Sequence Of Operation

A look through the accompanying drawings will give the exact orientation and relationship of the parts controlling the firing cycle.

To achieve positive and reliable functioning, the trigger group for the select-fire Ruger 10-22 was redesigned incorporating the basic design of the Belgian FN-FAL and West German HK-G3 battle rifle families. Both of these weapon systems are legendary in performance and reliability.

The modified 10-22 still retains the closed-bolt mode of operation.

When firing the modified weapon, the following sequence of events occur:

(1) COCKING THE WEAPON

1. Assuming there is a loaded magazine in place, the user retracts the bolt handle (and bolt assembly) which rotates the hammer rearward. This action compresses the recoil spring.

2. As the hammer almost completes its rearward rotation, the bottom of the hammer contacts the top of the disconnector which in turn pivots downward, releasing the sear to rotate upward into position against the hammer. The engagement between the hammer and sear is not yet set at this time because the hammer is fully rotated rearward.

3. During this same initial rearward movement of the bolt and hammer, the release lever and catch also move rearward slightly. The travel of these parts is limited by the ejector pin which is positioned through a slot in the release lever. Both parts have independent torsion springs which force them to rotate rearward. The stationary arm of these springs locates against the ejector pin. As the bolt and hammer complete their rearward travel, the engagement surface of the catch is against the hammer ready to engage the 'burst' notch.

4. When the bolt is fully retracted, it is released. Recoil spring tension then propels it forward.

5. At this same instant, the hammer (released from contact with the bottom of the bolt) rotates forward slightly and securely engages the sear and catch, (both previously positioned) in their respective engagement notches.

6. As the bolt is moving forward, it strips a live cartridge from the magazine and begins to chamber it.

7. At a given point just before the bolt closes completely, the top of the release lever (having previously moved rearward) makes contact with a radiused slot machined in the bottom of the bolt. As the bolt continues forward motion, the release lever rotates forward. Through engagement with the catch by means of a laterally positioned roll pin, the release lever rotates the catch out of engagement with the hammer. (Both the catch and release lever pivot on a common pin).

At this point, the weapon is ready to fire.

(F) SEMI-AUTO FIRE

1. The weapon is now in a loaded and cocked position as established in the sequence above.

2. The safety should now be moved to the "OFF" position. (The safety is unaltered in this modification and functions identically as before. By moving the safety to "OFF," the lower lug of the sear is provided with clearance to enable downward travel when the trigger is depressed)

3. The selector lever must be positioned in the rearward, or "semi" position. In this position a lug on the bottom of the selector lever pivot will be positioned in a downward position and will limit the upward travel of the rear section of the trigger.

4. Depress the trigger, thereby releasing the sear and hammer engagement. The hammer, under spring tension from the hammer spring, rotates forward striking the rear of the firing pin and detonating the cartridge.

5. The bolt, acting on the pressure generated during the resultant explosion of detonation, moves rearward, extracting and ejecting the fired cartridge case.

6. As the bolt moves rearward, the release lever moves as previously explained. As the bolt completes rearward travel, the disconnector disengages the sear enabling it to be in position for re-engagement with the hammer (as previously described).

7. Forward bolt travel performs the same functions as previously described. For another shot to be fired, the user must release the trigger and then depress it again to resume the sequence as described.

(3) FULL AUTO

1. The weapon is in a loaded and cocked position (as described in #1-7).

2. The safety is moved "OFF" (as described in #2-2).

3. The selector lever must be positioned in the forward or "BURST" position. In this position, the lug on the bottom of the selector lever pivot has rotated rearward enough to avoid contacting the upper, rear area of the trigger. The trigger in this position can be depressed further.

4. Fully depress the trigger, thereby releasing the hammer-sear engagement and resulting in detonation of the cartridge (as described in #2-4).

5. The trigger remains depressed as the bolt cycles rearward, extracting and ejecting the fired case (as described in #2-5).

6. The release lever and catch have rotated rearward (as described in #1-3).

7. At the rearmost travel of the bolt and hammer, the disconnector pivots downward and releases the sear to pivot upward. However, because the trigger/sear assembly has rotated further down than it did in the "semi" mode, the sear is not high enough to engage the hammer. The catch securely engages the hammer "burst notch," thereby holding the hammer rearward as the bolt begins forward travel, stripping and chambering a live cartridge.

8. At the instant before the bolt closes completely, the release lever contacts the bolt, pivots forward and disengages the catch (as described in #1-7). This allows the hammer to strike the firing pin and detonate the cartridge.

This cycle is repeated until the trigger is released. The sear can then rise, intercept the hammer, and interrupt the firing cycle.

SEMI-AUTO FUNCTIONING

Selector is set at "SEMI".
Bolt is in closed position.
Hammer is cocked, sear engaged.
Release lever and catch have pivoted forward.
Safety "ON".

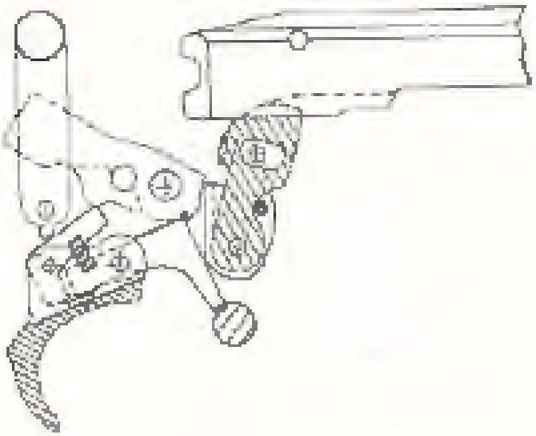

- Moving safety to "OFF" and depressing trigger will fire weapon.

OPERATING SEQUENCE	
FULL SCALE	DRWG NO. 14

FULL-AUTO FUNCTIONING

Selector is set at "BURST".
Safety "OFF".
Weapon has fired and bolt is moving forward under recoil spring tension.
Trigger is fully depressed, lowering the sear nose low enough to not engage hammer.
Release lever and catch have moved rearward and catch is engaging burst notch.

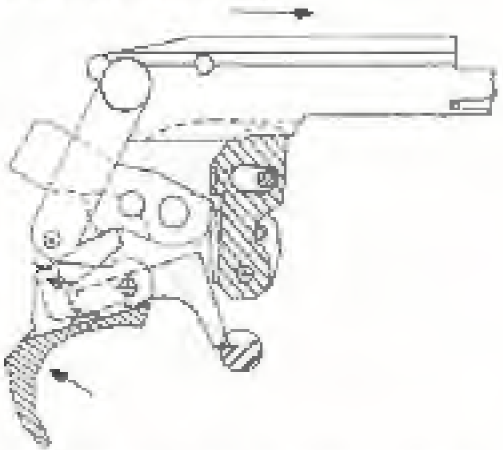

When bolt contacts and trips the release lever and catch assembly, the hammer falls to detonate cartridge.

OPERATING SEQUENCE	
FULL SCALE	DRWG. NO. 15

2

Parts To Be Removed Semi-Auto

Due to the design and characteristics of the Ruger 10-22, it has been necessary to eliminate the use of the bolt lock, and bolt lock spring.

This was necessary because the release lever, release lever spring, catch, catch spring, and pivot pin occupy the space where these parts originally are located.

All other components are used in this conversion.

PARTS TO BE REMOVED FOR SELECT FIRE 10-22 CONVERSION

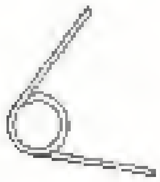

1
Bolt Lock Spring

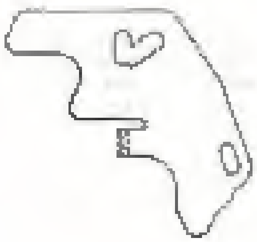

2
Bolt Lock

3

Parts To Be Modified

For select-fire conversion of the Ruger 10-22, minor modifications to six parts of the standard carbine is required. The modifications and purpose of each is described below.

1. Receiver- Drawing # 1.
   The receiver requires two 1/16" x .030 deep drilled detents, positioned in such a manner as to securely locate the position of the selector lever.

2. Trigger Housing- Drawing # 2.
   The trigger housing requires that a 1/8" hole be drilled through the housing as indicated. This facilitates assembly of the catch/release lever assembly. Also, a 7/32" hole and 9/16" long x 1/8" wide slot is required as indicated to allow assembly of the selector lever assembly.

3. Stock- Drawing # 3.
   The stock must be altered as shown to allow clearance for the selector lever assembly.

4 **Bolt** Drawing # 4
The bolt requires a slot to be machined on the bottom as indicated. This provides a [illegible] surface and proper timing for contact with the release lever.

5 **Trigger** Drawing # 5
The trigger requires a small clearance cut to be made in the upper rear portion near the disconnector pin hole. The web area must be filed as indicated to provide further rotation of the trigger assembly. The drawing can be used as a template for location. Also a small .150 x .030 shim is epoxied in position on the [illegible] at the position indicated. This is necessary to limit the upward travel of the sear when it disengages from the disconnector.

6 Hammer Drawing # 6
A "BURST" notch is cut into the hammer as indicated. This engages the catch when actuated.

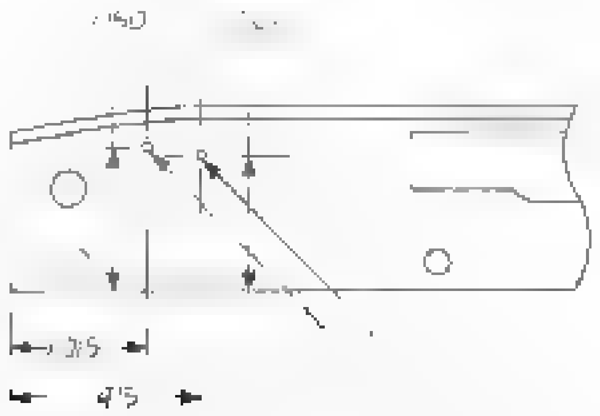

Selector Pos Firing Detents

Drill 3 .06" diameter x .030 deep

RECEIVER F.A.
FULL SCALE DRWG. NO. 1

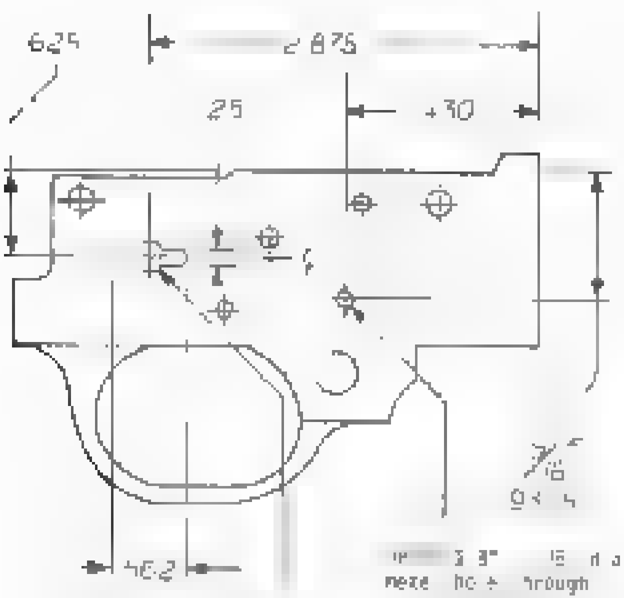

D [illegible] .37 [illegible]
Hammer hole through
right trigger housing [illegible]

[illegible] 3/8 [illegible] 15 [illegible] dia
make hole through
trigger housing for
R. Lever & Latch Pivot
pin

Selector Assembly is installed in Trigger Housing by aligning the lugs and slot and inserting the selector rotated upward 90°

TRIGGER HOUSING - F.A.
FULL SCALE | DRWG NO 2

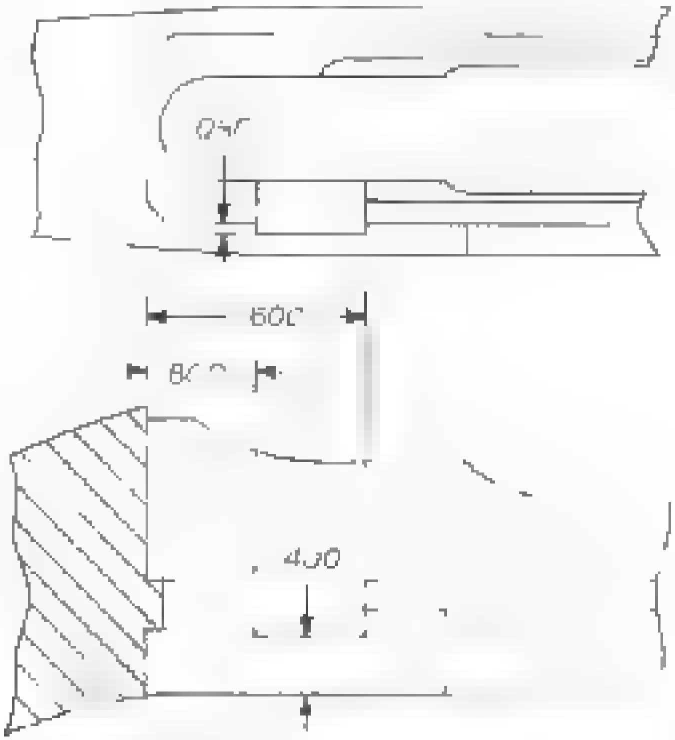

Inlet stock in this area to provide for selector Assembly

STOCK
FULL SCALE | DRWG No. 3

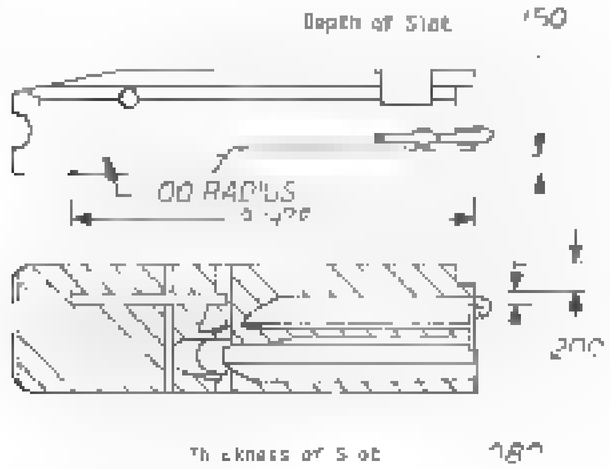
Depth of Slot
.150
.00 RADIUS
2.420
.200
Thickness of Slot
.180

▨

Diagonal shaded area represents the flat surfaces of underside of bolt.

BOLT F.A., SELECTIVE FIRE	
FULL SCALE	DRWG. NO. 4

NOTE ON BOLTS

The bolt design of the Ruger 10/22 was changed at some point. Below are shown examples of each. For this modification, each bolt can be used or interchanged.

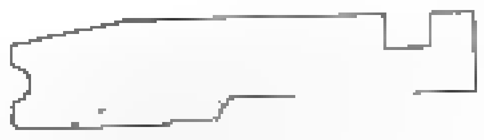

Old Style Bolt

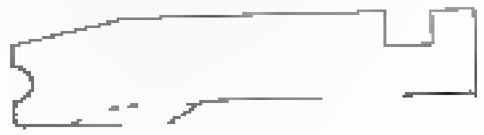

New Style Bolt

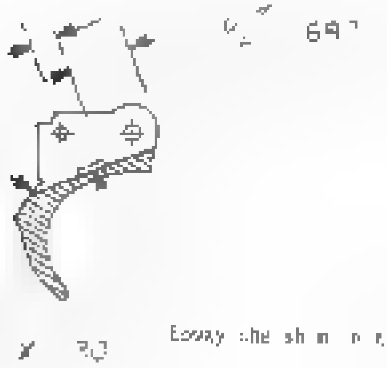

Epoxy shoe shim in this area

File web down in this area

TRIGGER [illegible]
FULL SCALE | DRWG NO

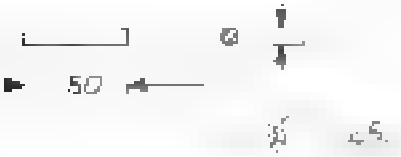

PIVOT PIN—CATCH RELEASE LEVER
FULL SCALE | DRWG NO 5

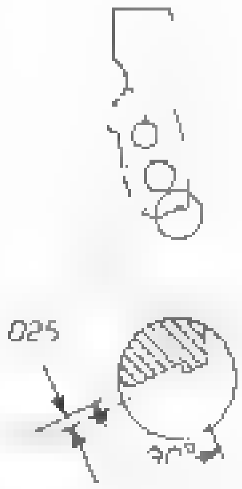

Burst Notch should be ground to the dimensions shown

HAMMER [illegible] A.
FULL SCALE | DRWG NO. 6

4

Parts To Be Manufactured

The following are the new parts required for selective fire conversion of the Ruger [illegible]. Materials for the construction are also included.

1 Release Lever (Drawing # 7)
The release lever is designed to be made from 1/16 thickness steel sheet metal. This part has a tab which is bent around a possible [illegible] providing [illegible] of the working arm of the release lever spring. The overall shape can be transferred by using the drawing as a template. The dimensioned areas should be as accurate as possible to ensure proper timing of hammer disengagement.

2 Latch (Drawing # 8)
The latch shown can be made by bending a piece of 1/16 sheet metal into a channel shape of the proper width and then filing the profile to match the drawing. A 3/32 x 5/8 roll pin is pressed through the sides of the latch as indicated. (Press a longer pin through and then grind to finished length.)

Dimensioned surfaces must be as accurate as possible to ensure proper engagement with the hammer.

3 Spring—Release Lever Drawing # 9
This [illegible] spring is to be made from .030 [illegible] wire or an equivalent. It can be easily made with a little practice. Use a 1/8" approximate diameter rod clamped in a vise or an arbor. Cut about a 3" long piece of wire and clamp both ends with vise grips. When the approximate angle as shown in the drawing is achieved, release the spring and bend the two curves as shown. Cut spring arms to the approximate length as shown on the drawing.

4 Spring—Catch Drawing # 10
Same as above in # 3

5 Selector Lever Drawing # [illegible]
The selector lever can be made from .050 thickness steel spring stock, or banding if available. If neither is available, stock as used for the release lever and catch is sufficient.

6 Selector Positioning Lug Drawing # [illegible]
This lug can be made of any available steel stock. To assemble it [illegible] the selector lever as shown and fasten the .125 x .060 diameter lug [illegible] the lever [illegible] the hammer [illegible] on the lug to mushroom and be securely fixed in place.

7 Selector Knob Drawing # 3
The selector knob can be made of the same material as the lug in # 6. The knob is knurled to provide a better grip. The .090 diameter [illegible] .040 [illegible] the selector assembly by mating with the indents in the receiver. To assemble the knob, either braze the knob in place or [illegible] the .3 [illegible] .87 diameter into the chamfer in the lever after the two are in position. Use a piece of steel rod with a 1/8 hole in the center as a punch to stake the knob securely.

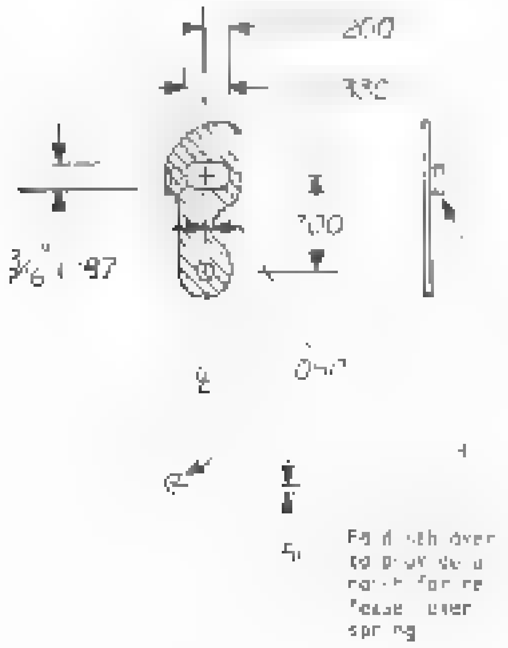
.200
.330
.700
3/16" .197
.040
Grind notch over to provide a notch for release lever spring

RELEASE LEVER
FULL SCALE DWG NO. 7

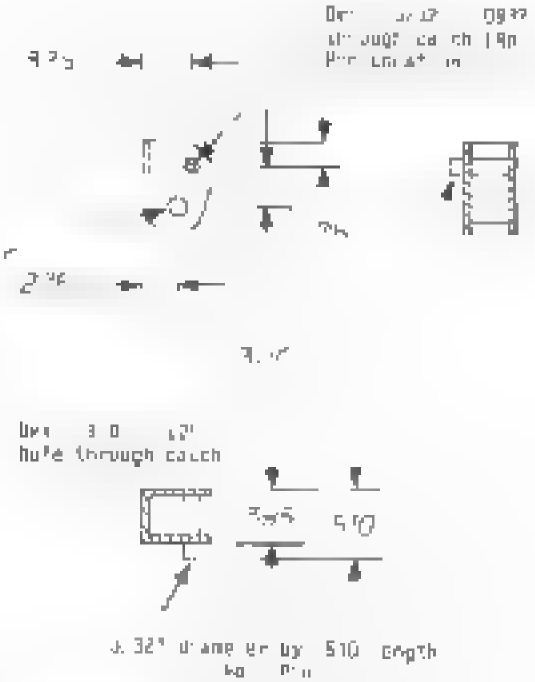
Drill .0937 through catch for pin location
Drill 3/32 hole through catch
.510
3/32" diameter by .510 length pin

CATCH
FULL SCALE DWG. NO. 8

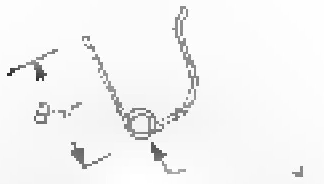

Make springs from .030 diameter music wire. Form springs to approx. shape as shown

SPRING RELEASE LEVER
FULL SCALE DRWG. NO. 9

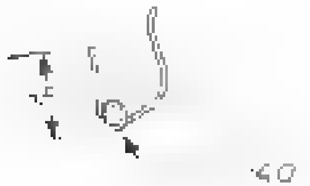

SPRING ATT[illegible]
FULL SCALE DRWG. NO. [illegible]0

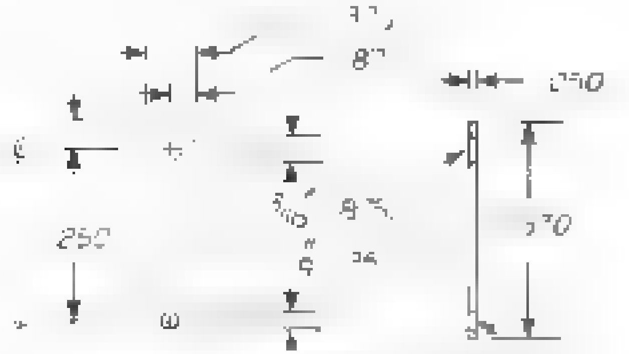
8°
.250
.250
.370
.875
.030
.094

[illegible] surfaces indicated .010 x 45

SELECTOR LEVER
FULL SCALE DRWG. NO.

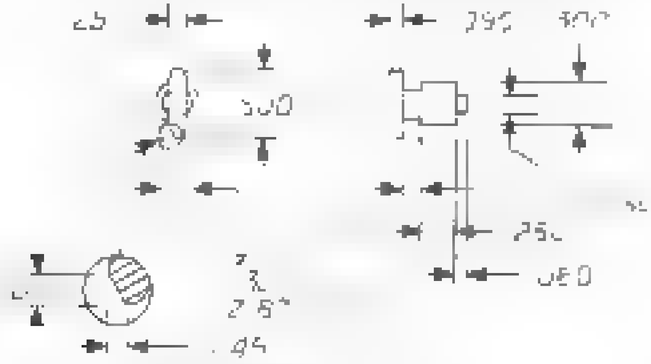
.25
.295
.300
.500
.250
.060
2.5
.45

SELECTOR POSITIONING LUG
FULL SCALE DRWG. NO. 12

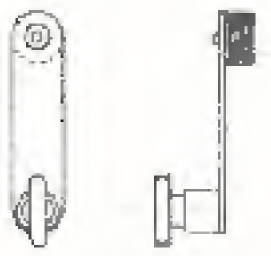

Selector Assembly

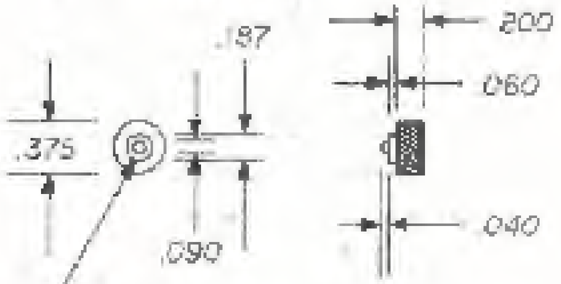

Flare this surface when
assembled in Selector Lever

SELECTOR ASSY & SEL. KNOB	
FULL SCALE	DRWG NO 13

RELEASE LEVER AND CATCH ASSEMBLY

1. Release Lever
2. Release Lever Spring
3. Catch
4. Catch Spring
5. Pivot Pin-Release Lever and Catch

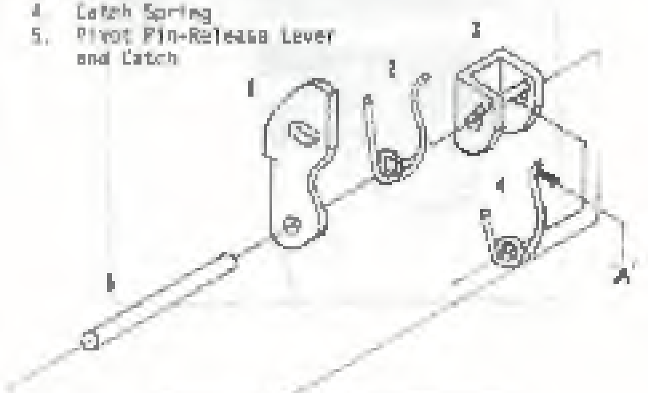

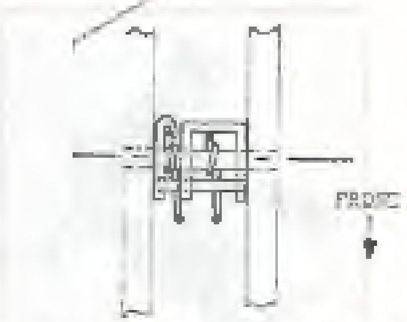

'A' - This curved area on both springs is to be located against the rear side of the ejector pin. This provides tension on both springs to force the catch and release lever rearwards.

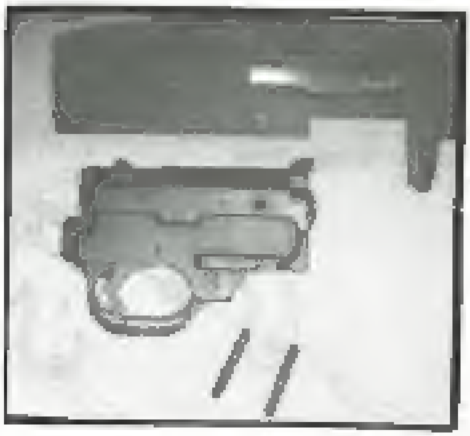

PARTS LIST

1. Receiver
2. Trigger Guard Assembly
3. Barrel
4. Stock
5. Receiver Cross Pins (2)
6. Bolt Assembly
7. Bolt handle, Guide Rod, and Recoil Spring Assembly
8. Barrel Retainer
9. Barrel Retainer Screws
10. Barrel Band
11. Magazine
12. Trigger Housing
13. Hammer
14. Hammer Strut
15. Hammer Spring
16. Hammer Bushings (2)
17. Hammer Pivot Pin
18. Hammer Strut Washer
19. Pivot Pin-Magazine Latch and Ejector Pin
20. Ejector
21. Bolt Lock Spring
22. Magazine Latch Plunger
23. Magazine Latch Plunger Spring
24. Bolt Lock
25. Magazine Latch
26. Safety
27. Safety Detent Plunger
28. Safety Detent Plunger Spring
29. Trigger
30. Trigger Plunger
31. Trigger Plunger Spring
32. Disconnector
33. Disconnector Pivot Pin
34. Sear
35. Sear Spring

PARTS LIST CONTINUED

36. Trigger Pivot Pin
37. Bolt
38. Firing Pin
39. Firing Pin Rebound Spring
40. Firing Pin Stop Pin
41. Extractor
42. Extractor Plunger
43. Extractor Spring
44. Bolt Stop Pin

RUGER MODEL 10/22 CARBINE

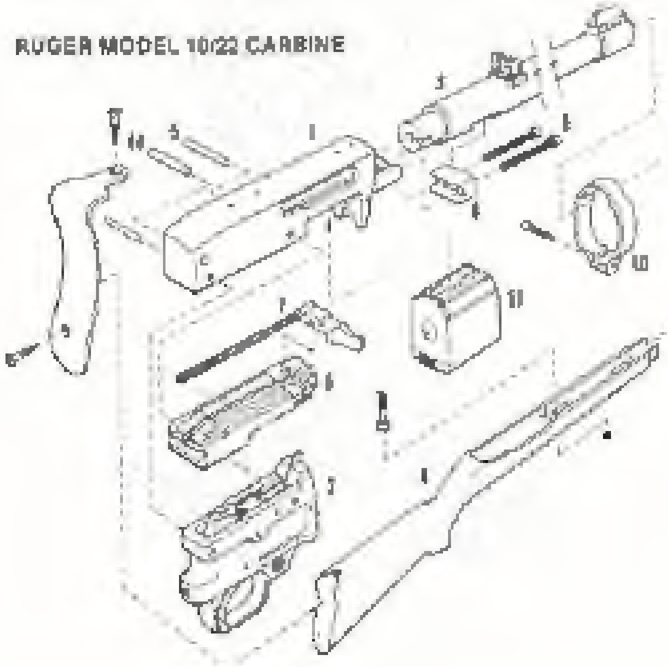

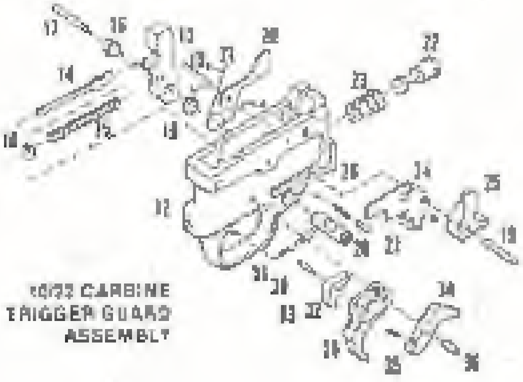
17
16
13
20
22
14
18
21
23
15
19
12
26
24
25
19
28
27
30
31
29
33
32
34
36
35

10/22 CARBINE
TRIGGER GUARD
ASSEMBLY

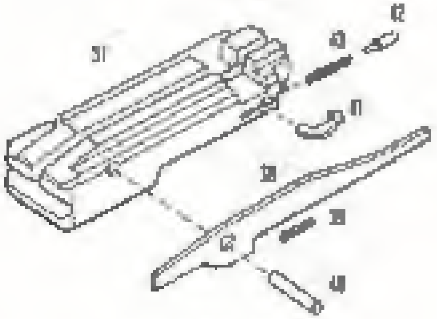
37
42
40
41
38
39
43
40

10/22 CARBINE
BOLT ASSEMBLY